martinelli luce

GATE
code: *2031/5/150/AG*

DESIGNER **EMILIANA MARTINELLI** 2005

SUSPENSION SYSTEM COMPOSED BY A SUPPORTING STRUCTURE MADE IN ANODIZED ALUMINIUM
AND BY 5 DIRECT LIGHT CODE 2834, ALUMINIUM BODY IN SILVER COLOR WITH GLASS DIFFUSER.
COMPLETE WITH POWER SUPPLY.

UTILIZATION:	**INTERNAL**	**TYPOLOGY:**	**HANGING**
COLOURS	STRUCTURE: DIFFUSER:	**SILVER** **WHITE**	
MATERIALS	STRUCTURE: DIFFUSER:	**ALUMINIUM** **SATIN GLASS**	
MEASURES	WIDTH: **52 cm** DEPTH: **-** HEIGHT: **10 cm**	LENGTH: **257 cm** DIAMETER: **-**	
	HOLE DIAMETER: **-**	HOLE DEPTH: **-**	
	WEIGHT NET: **27 Kg** PACKAGING VOL.M^3: **45X265X10**	GROSS: **28 Kg** NUMBER OF ITEMS: **1**	
BULBS	METAL HALIDE 5X150W G12 CDM-T		
VOLTAGE	**230V**		
POWER SUPPLY	**POWER SUPPLY**		
CERTIFICATIONS	IP40		
MARKETS	THIS ITEM IS AVAILABLE IN THE FOLLOWING COUNTRIES: **EUROPE**		

TECHNICAL DRAWINGS

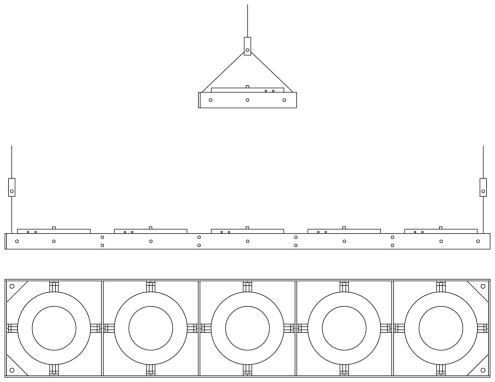

GATE
code: *2031/5/70/AG*

DESIGNER **EMILIANA MARTINELLI** 2005

SUSPENSION SYSTEM COMPOSED BY A SUPPORTING STRUCTURE MADE IN ANODIZED ALUMINIUM
AND BY 5 DIRECT LIGHT CODE 2834, ALUMINIUM BODY IN SILVER COLOR WITH GLASS DIFFUSER.
COMPLETE WITH POWER SUPPLY.

UTILIZATION:	**INTERNAL**	**TYPOLOGY:**	**HANGING**
COLOURS	STRUCTURE: DIFFUSER:	**SILVER** **WHITE**	
MATERIALS	STRUCTURE: DIFFUSER:	**ALUMINIUM** **SATIN GLASS**	
MEASURES	WIDTH: **52 cm** DEPTH: **-** HEIGHT: **10 cm**	LENGTH: **257 cm** DIAMETER: **-**	
	HOLE DIAMETER: **-**	HOLE DEPTH: **-**	
	WEIGHT NET: **27 Kg** PACKAGING VOL.M^3: **45X265X10**	GROSS: **28 Kg** NUMBER OF ITEMS: **1**	
BULBS	METAL HALIDE 5X70W G12 CDM-T		
VOLTAGE	**230V**		
POWER SUPPLY	**POWER SUPPLY**		
CERTIFICATIONS	IP40		
MARKETS	THIS ITEM IS AVAILABLE IN THE FOLLOWING COUNTRIES: **EUROPE**		
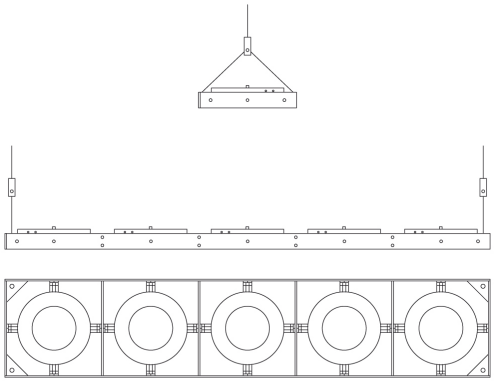
TECHNICAL DRAWINGS