21004/10
KIKI
Design: Paola Navone – Studio Otto, 2018

martinelli luce

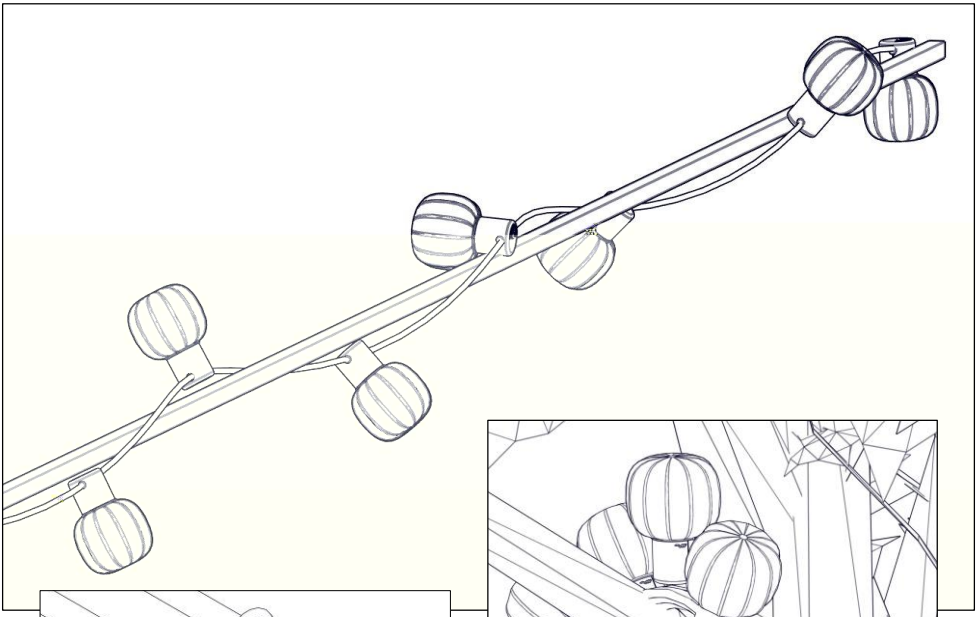

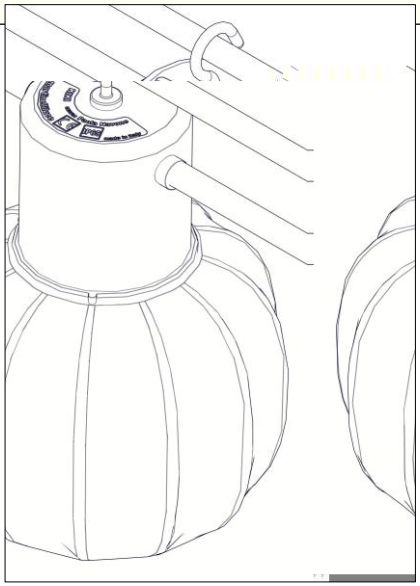

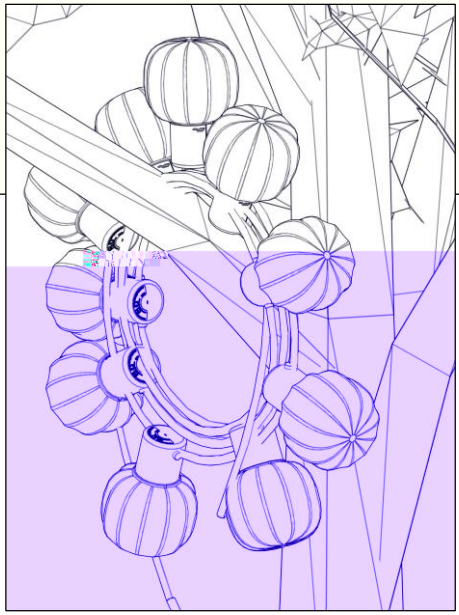

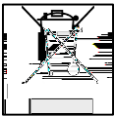

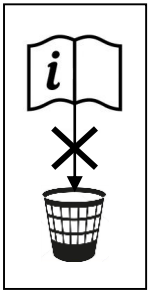

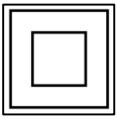

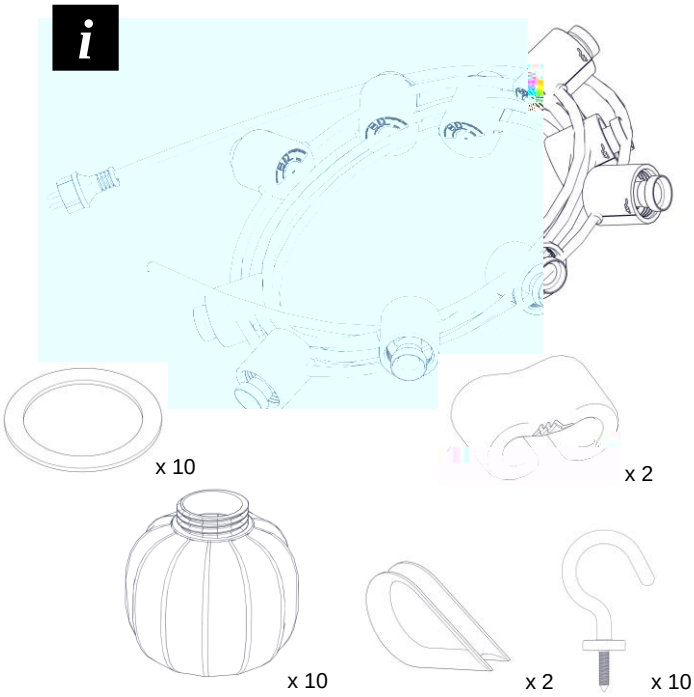

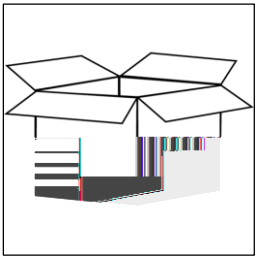

Optional
Art. 40169

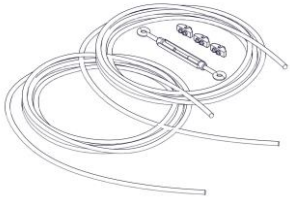

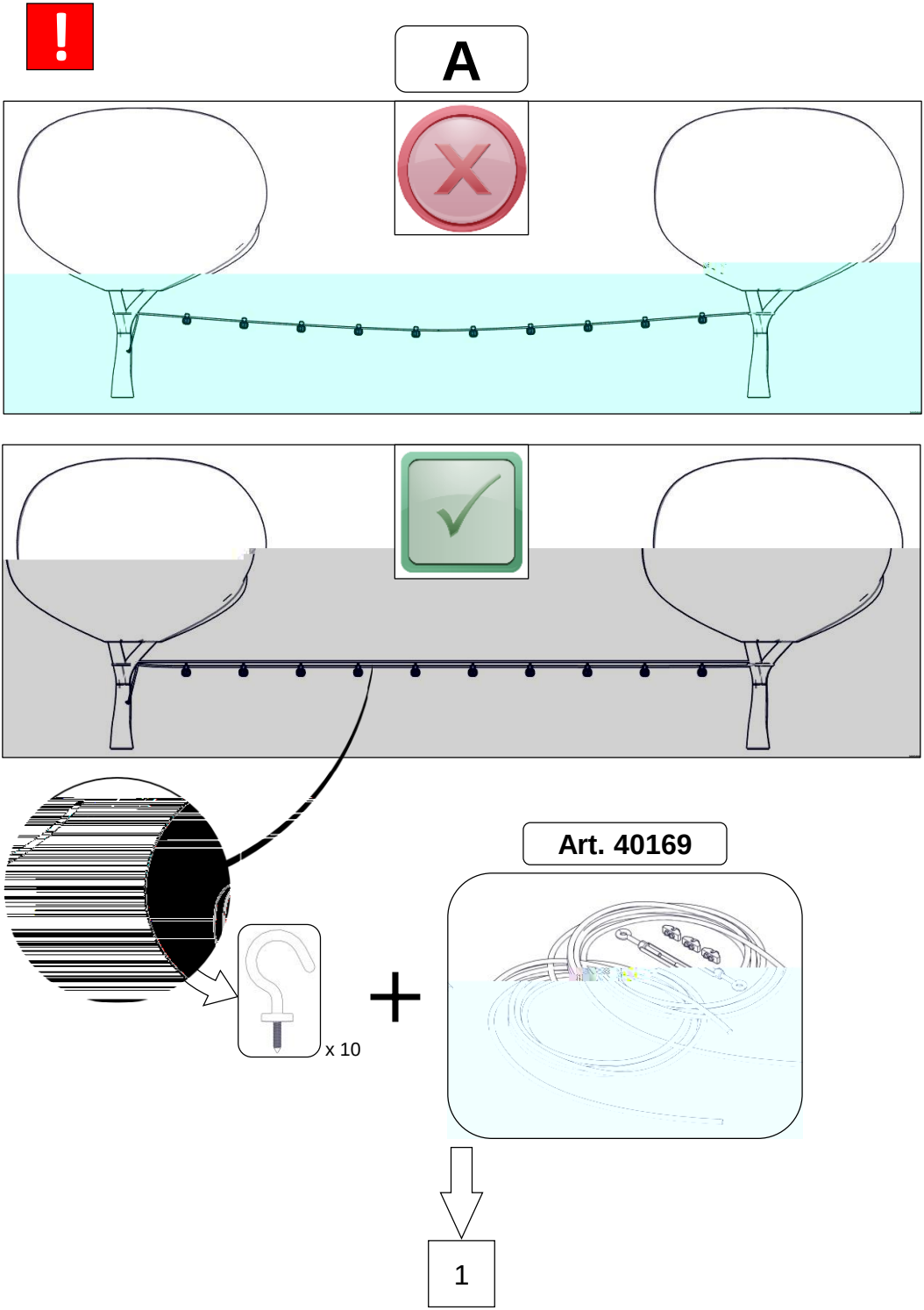
A
x 10
Art. 40169
1

!

B

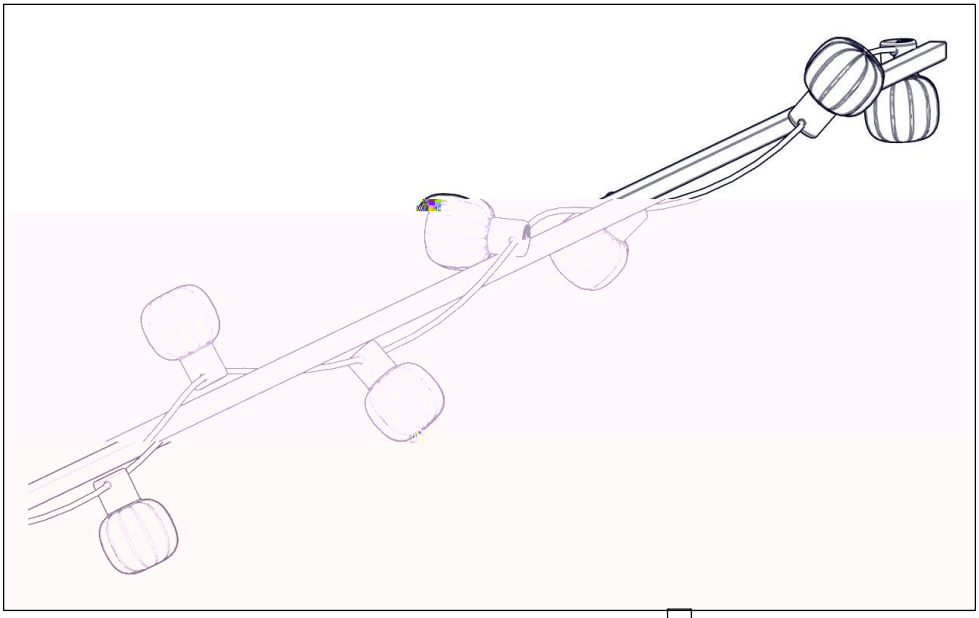

17

C

23

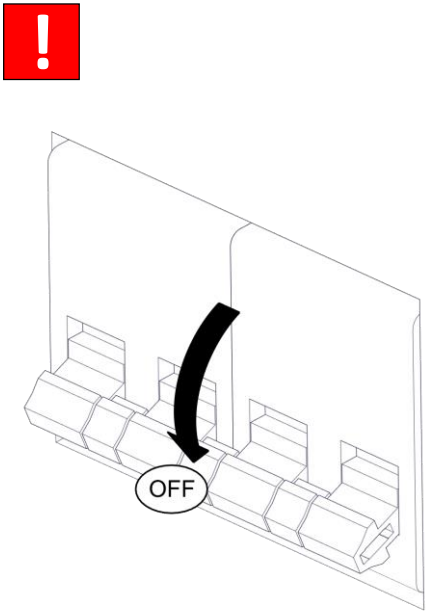

1

A

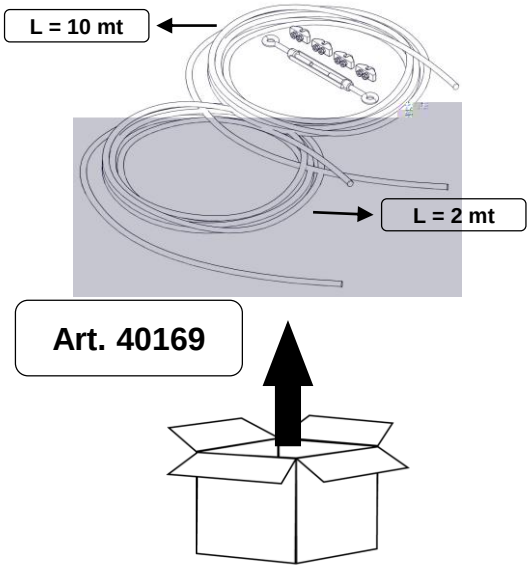

2

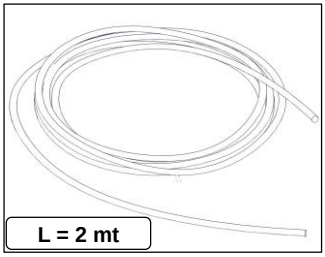

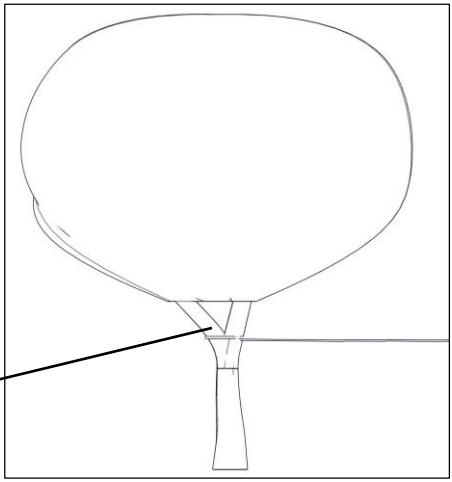

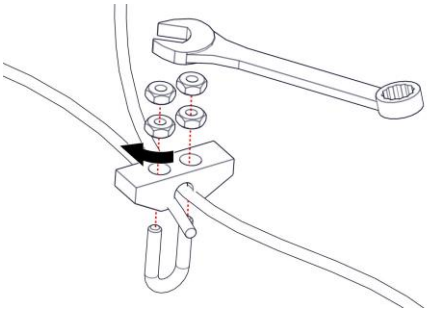

3

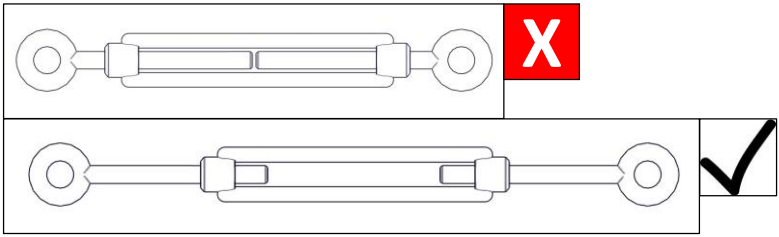

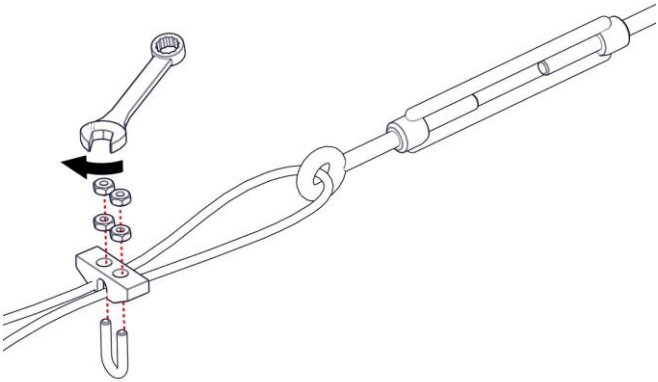

4

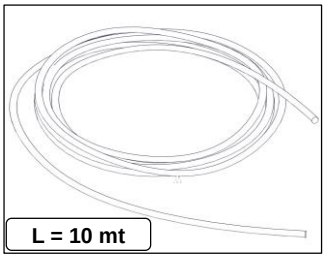

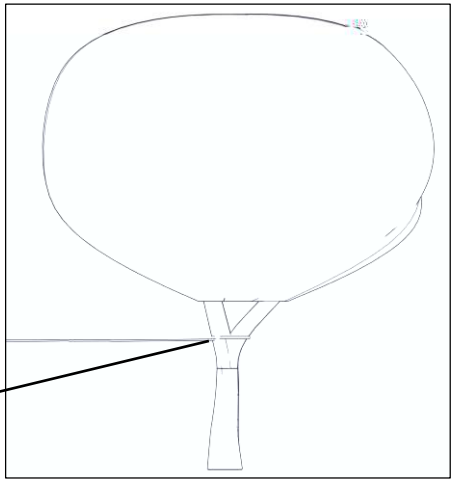

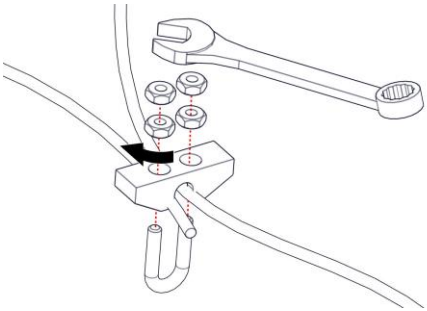

7

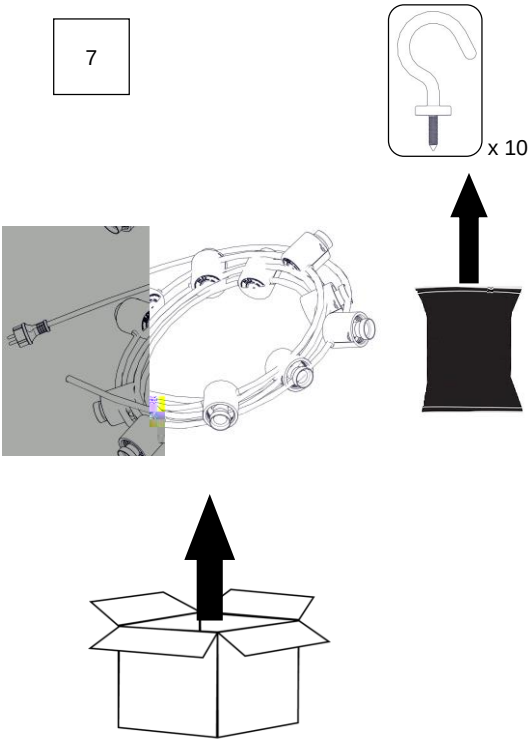
x 10

8

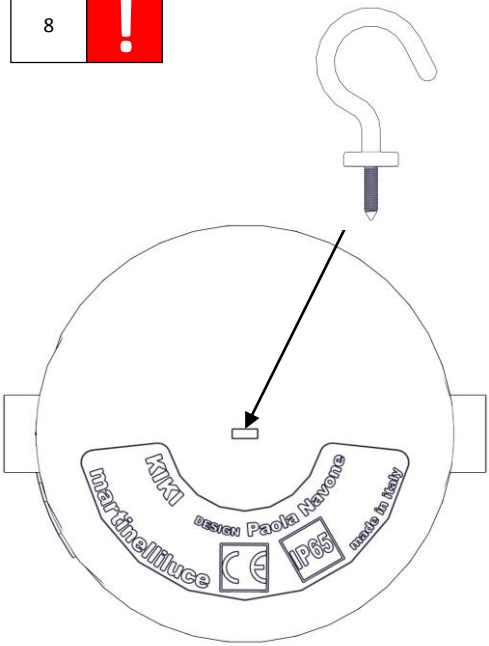
kiki
design Paola Navone
made in italy
IP65
marset illuce

9

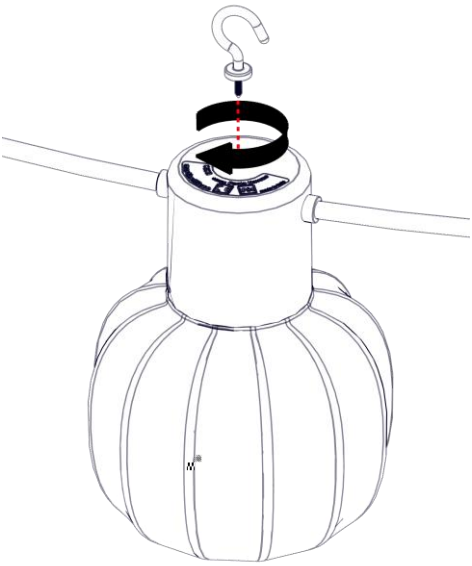

10

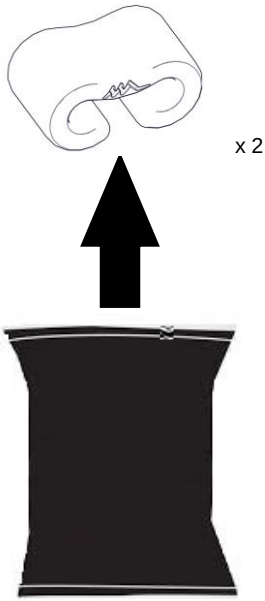
x 2

11a

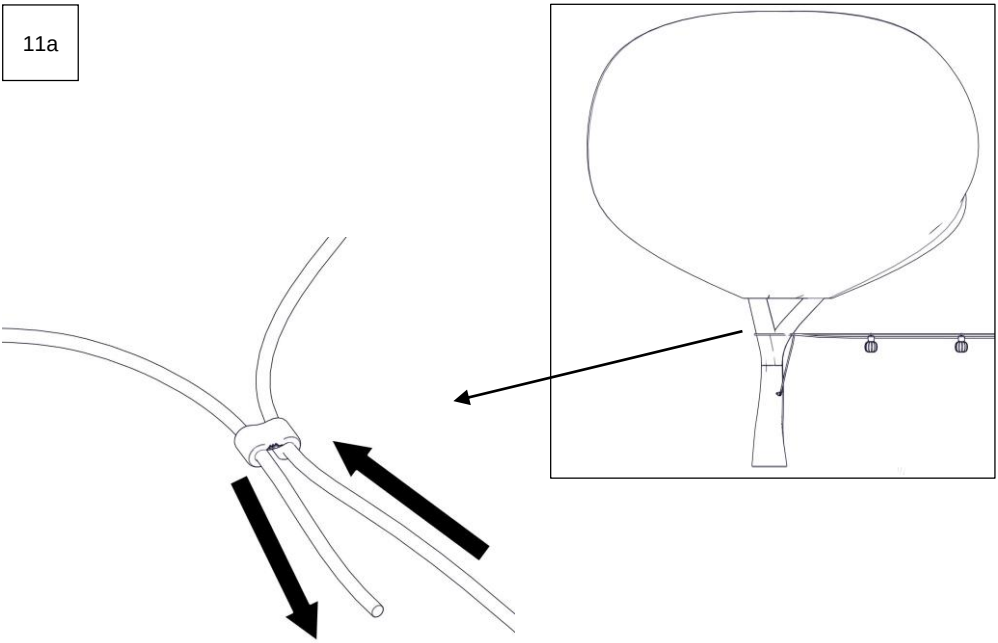

11b

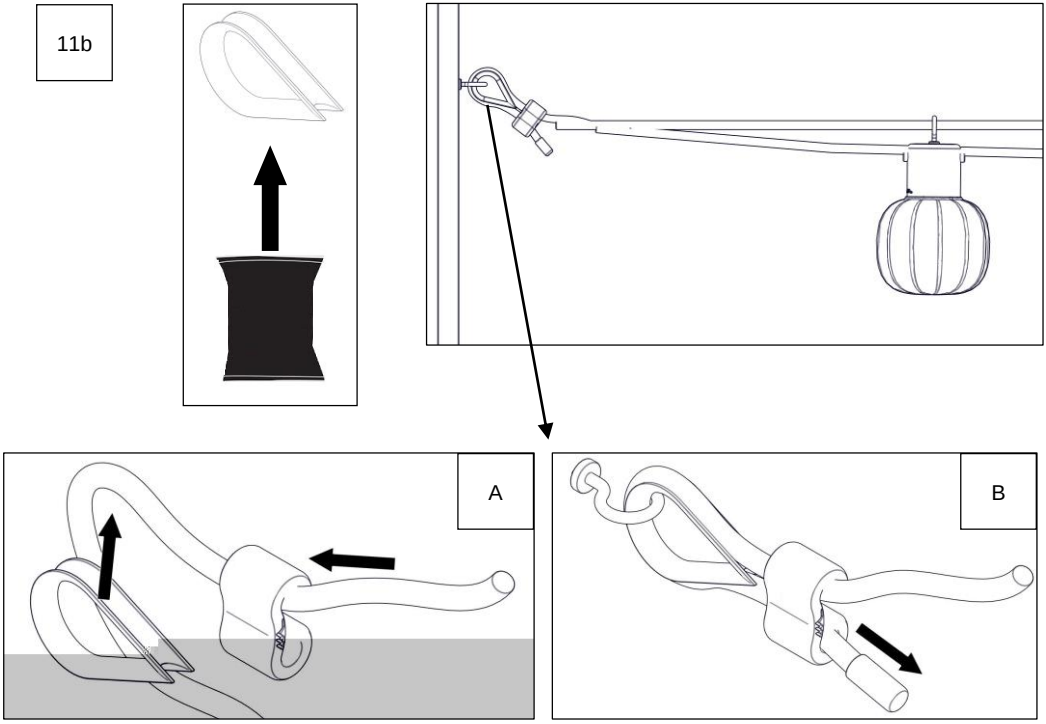

12a

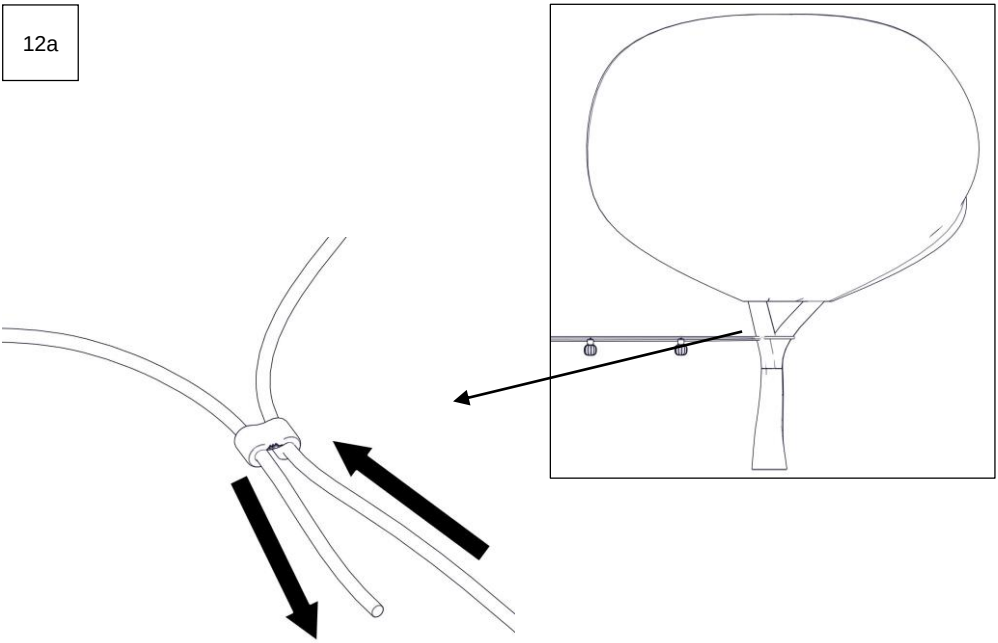

12b

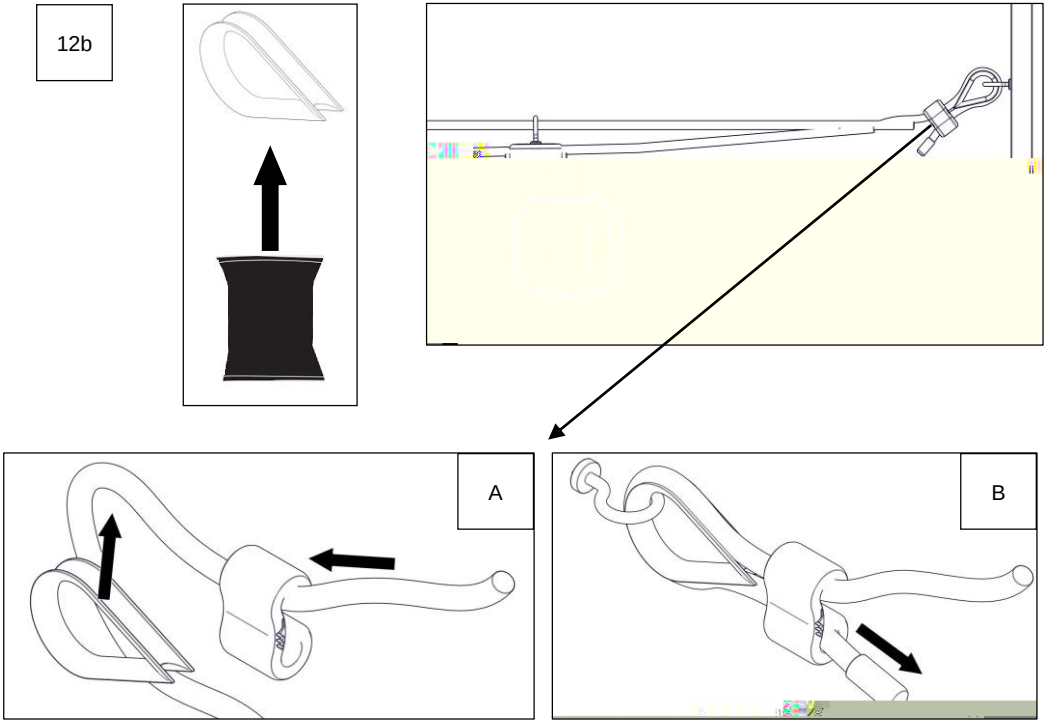

13

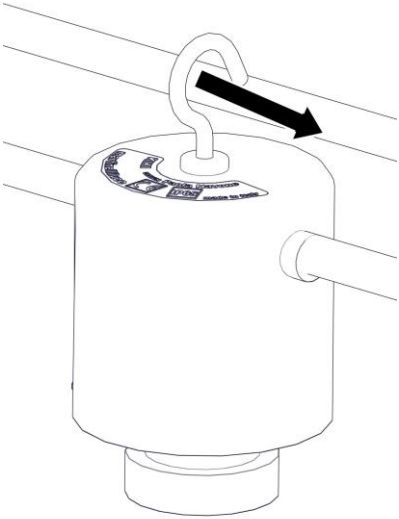

14

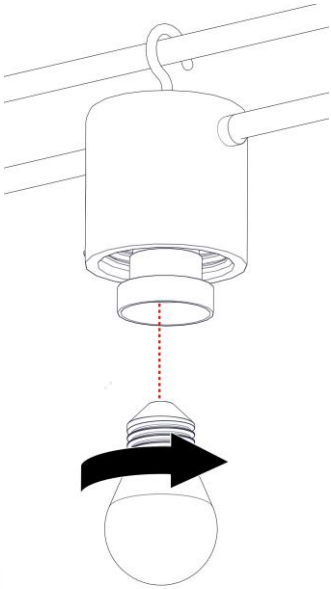

5,3 W LED
E27
Max Ø4,5 cm

15

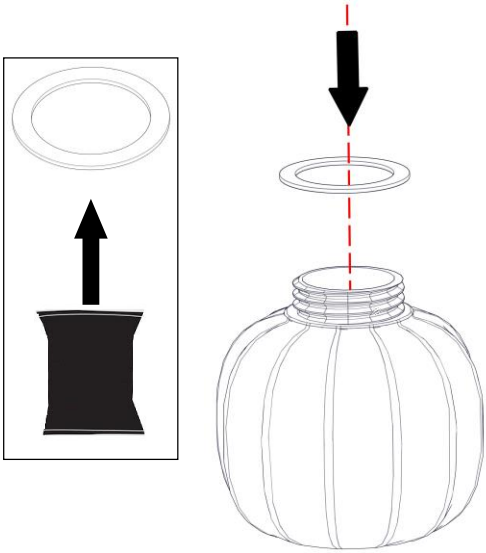

16

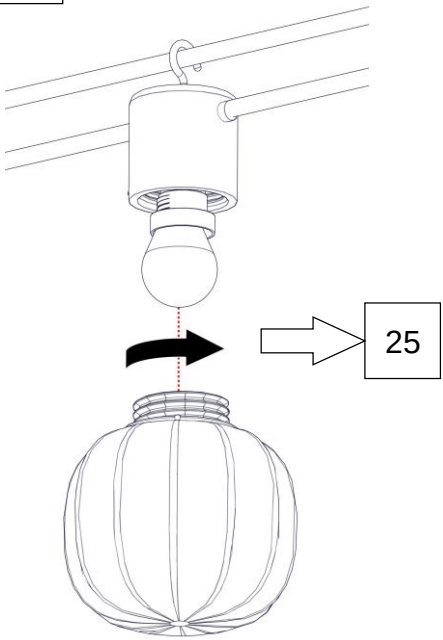

17

B

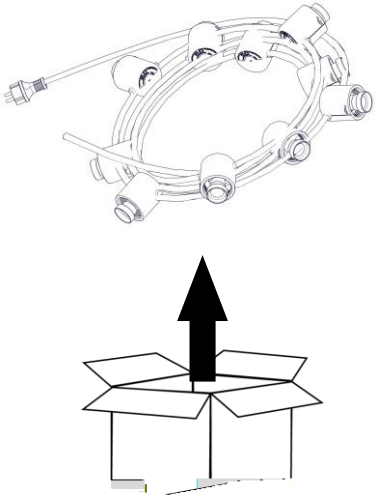

18

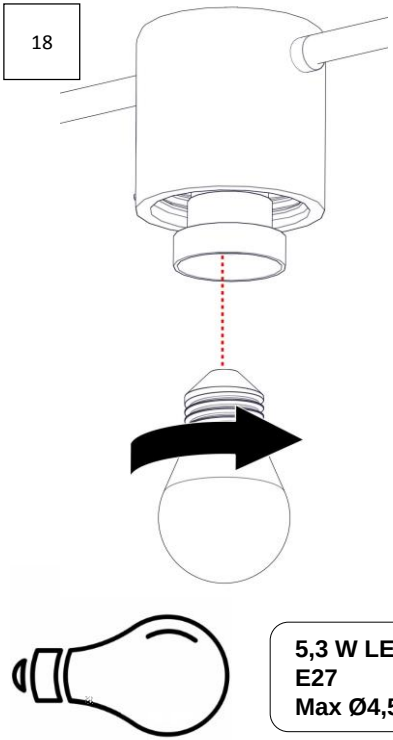

19

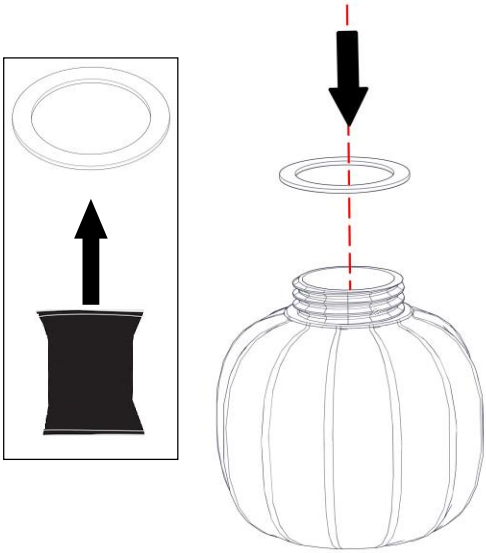

20

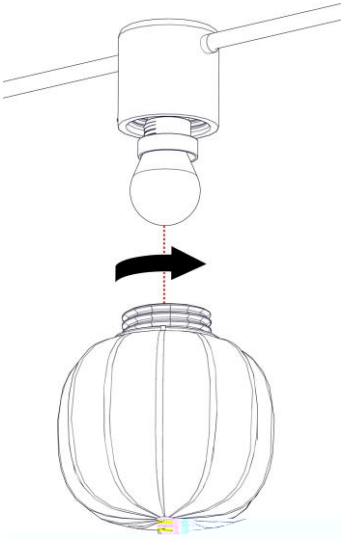

21

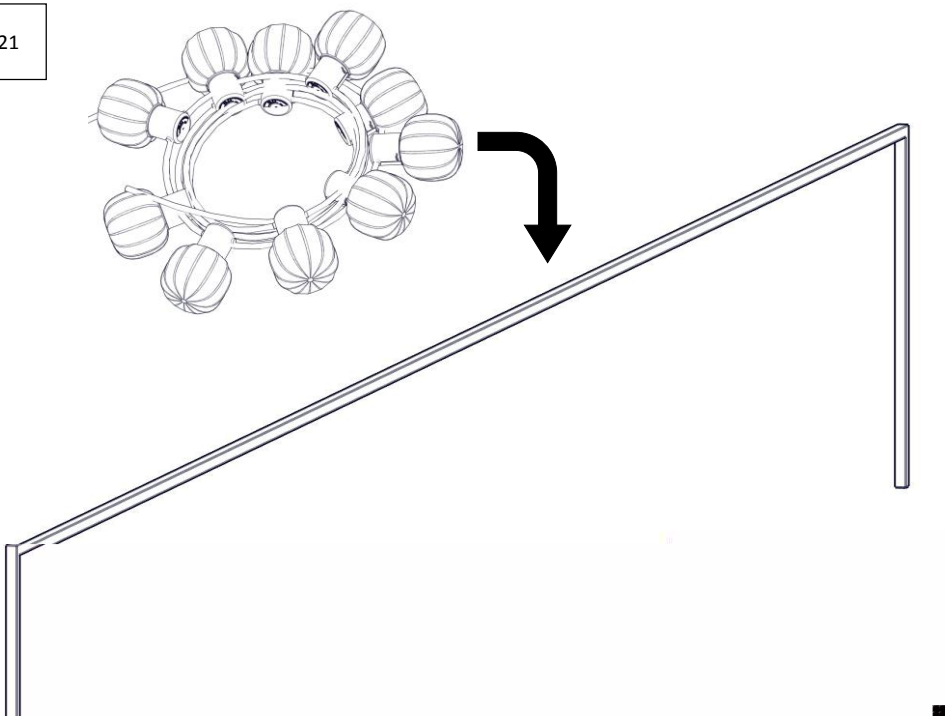

22

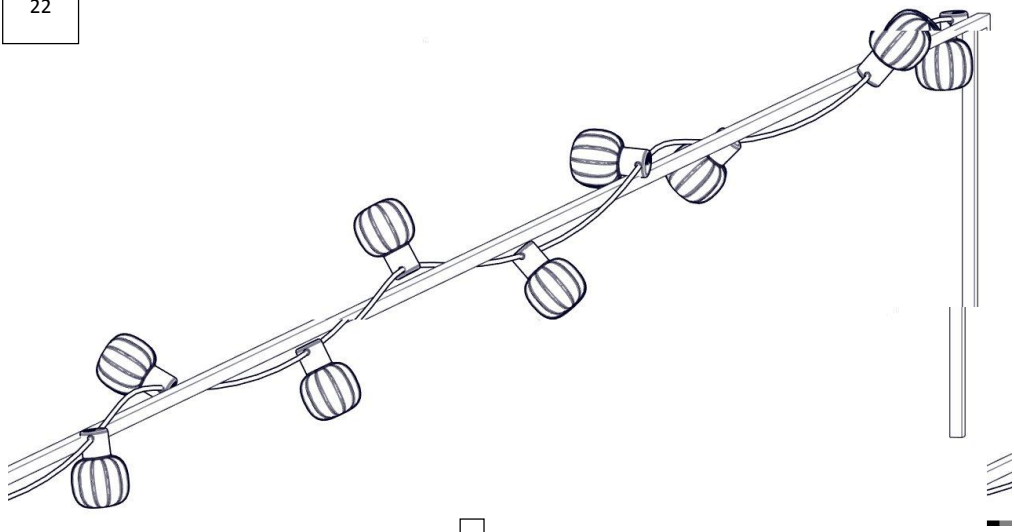

28

23

C

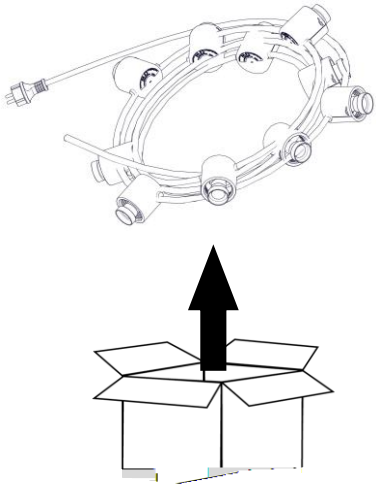

24

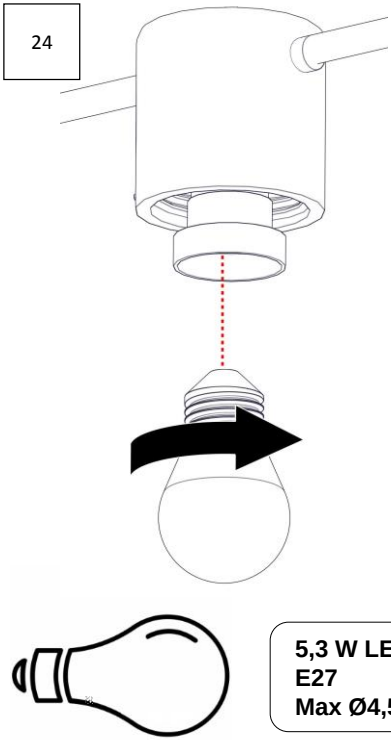

5,3 W LED
E27
Max Ø4,5 cm

25

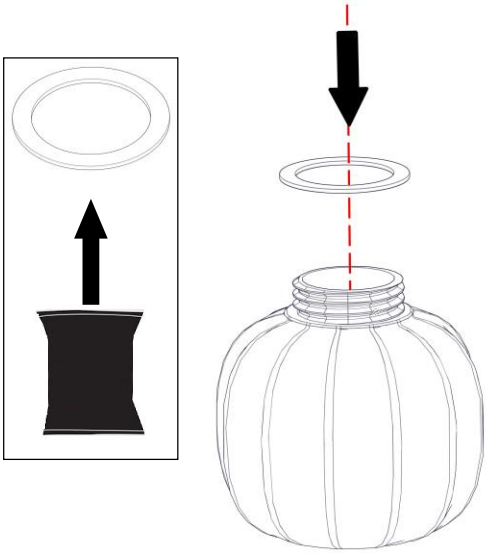

26

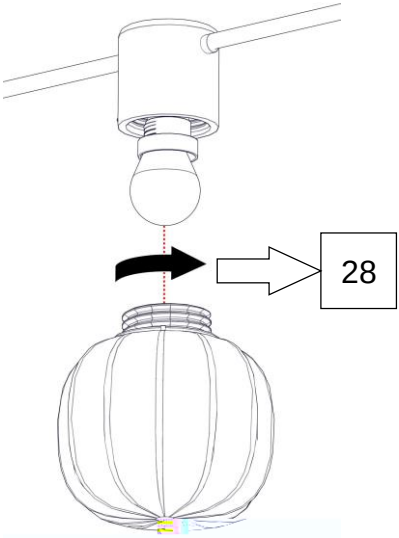

27

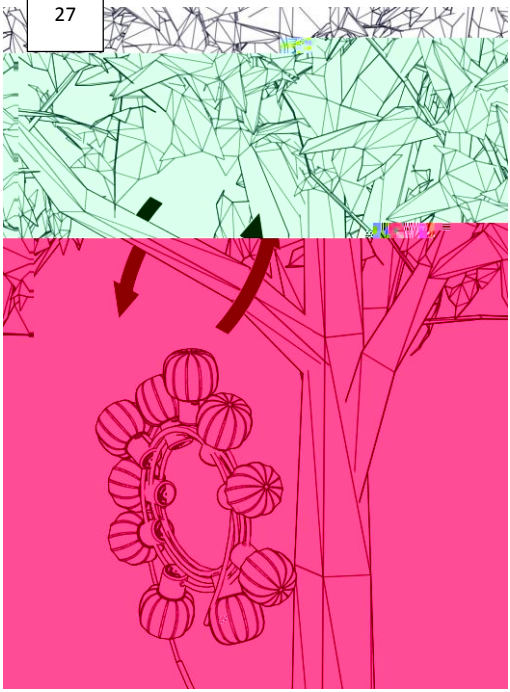

28

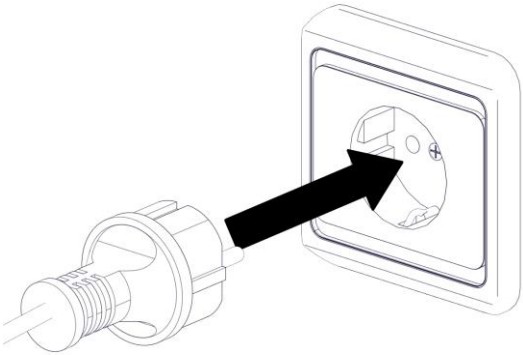

29

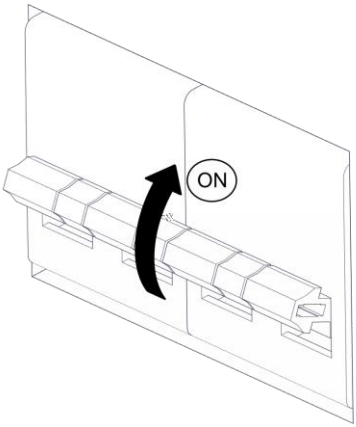

i

martinelli luce

Via Teresa Bandettini
55100 Lucca (Lu) – Italy

Tel.+39/0583.418315
Fax. +39/0583.419003

www.martinelliluce.it
info@martinelliluce.it